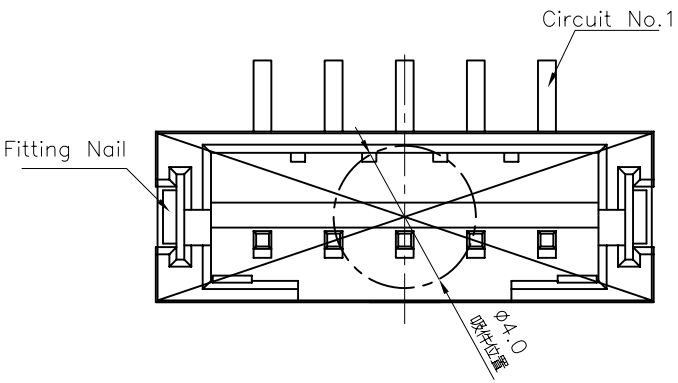

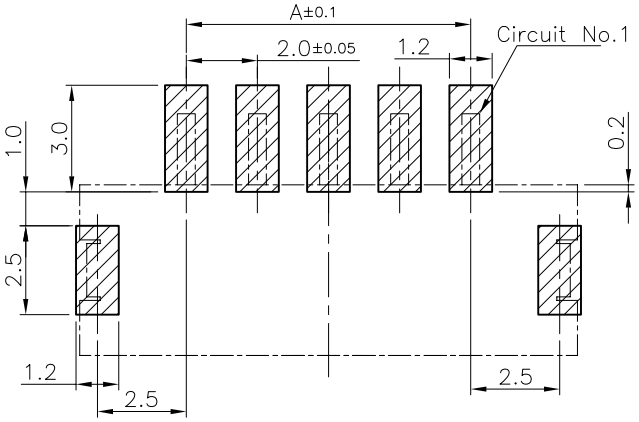

PCB PATTERN LAYOUT

GENERAL TOLERANCE ±0.05

NOTES:
1. MATERIAL:
   1.1 HOUSING: HALOGEN FREE PLASTIC, HIGH TEMP., UL94V-0;
   1.2 CONTACT: COPPER ALLOY
   1.3 FITTING NAIL: COPPER ALLOY
2. FINISH:
   2.1 CONTACT:
   50u"~100u" NICKEL UNDERPLATING OVERALL.
   1: GOLD FLASH PLATING
   2.2 FITTING NAIL:
   50u"~100u" NICKEL UNDERPLATING OVERALL.
   1: GOLD FLASH PLATING
3. REFLOW SOLDER CAPABLE TO 260°C PER ACES SPEC.
4. SPEC. PLS. REFER TO PS-50305-xxxxx-xxx
5. PACKAGE PLS. REFER TO 88290-xxxx-TRP

P/N LEGEND

51401-XXX X X-XXX

Others	Housing color	HALOGEN FREE	PACKING
001	BLACK	HF	88290-XXXX-TRP

CKTS

Packing
4:Tape & Reel with Mylar
7:TAPE & REEL WITH COVER

Plating
1:GOLD FLASH

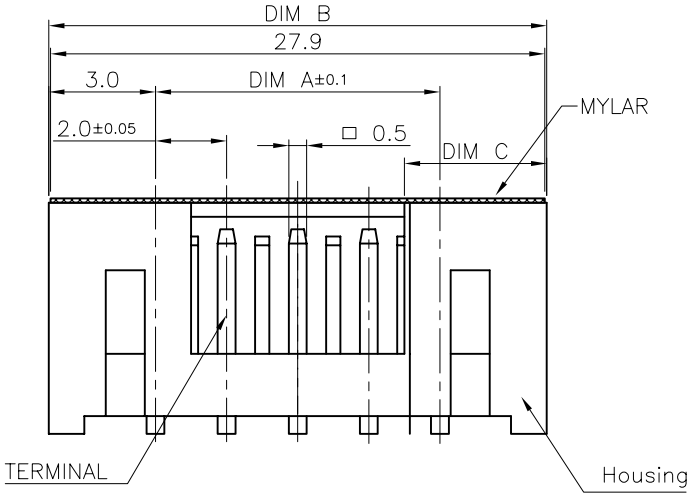

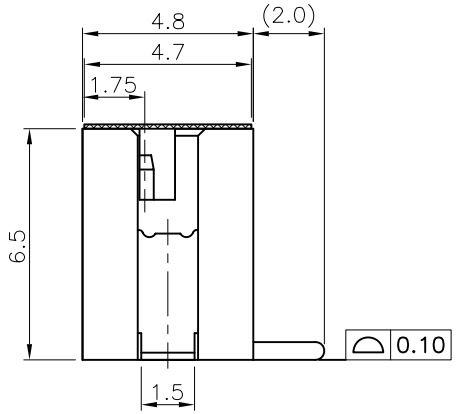

CKT	Dim A	Dim B
2	2.0	8.0
3	4.0	10.0
4	6.0	12.0
5	8.0	14.0
6	10.0	16.0
7	12.0	18.0
8	14.0	20.0
9	16.0	22.0
10	18.0	24.0
11	20.0	26.0
12	22.0	28.0
13	24.0	30.0
14	26.0	32.0
15	28.0	34.0
16	30.0	36.0
17	32.0	38.0
18	34.0	40.0
19	36.0	42.0
20	38.0	44.0

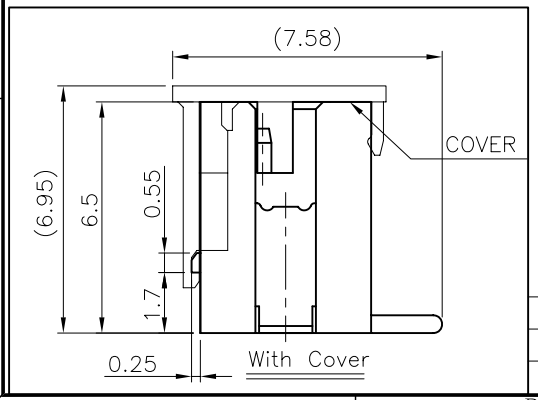

CKT	DIM C
2	3.50
OTHER	4.00

QUALITY SYMBOLS MAJOR CRITICAL	DRAWN BY: Wu Xiao Guang DATE: 18'/05/31	ACES ELECTRONICS	
GENERAL TOLERANCES (UNLESS SPECIFIED) X. ±0.5 .X ±0.25 .XX ±0.15 .XXX ±0.1 ANGLES ±2°	CHECKED BY: Lu Jing Quan DATE: 18'/05/31	TITLE: 2.0mm WTB HEADER SMT S/T S/R H=6.5mm TYPE	
	APPROVED BY: hsieh fu yu DATE: 18'/05/31		
	UNITS: mm	SIZE: A4	DWG NO.: 51401-XXXXX-XXX
	SCALE: 5 : 1	SHEET NO.: 1 OF 1	REV: O
			PART NO.: SEE NOTES